?ｵ鯑ｵｫｵｫ､ｫｺ A3(JIS Z 8311)　　FQD-3B01-06-00

REVISION ﾋﾇ				
REV.MARK	DATE ﾜ	CONTENTS ﾋﾇ....?..鮟	REVISED ﾋﾇ..	APPD. 羆..
△				
△				
△				
△				

REMARK ﾝ?ﾍﾅ　CODE No.:402699

(NOTE) 1.OPERATING PRESS.FOR CYLINDER 0.4~0.6MPa.
2.MATERIAL OF DIAPHRAGM SURFACE CONTACTED WITH GAS.:Ni-CO ALLOY.
3.Cv VALUE:0.1(20°C)
4.TEMPERATURE RANGE:-10~40°C

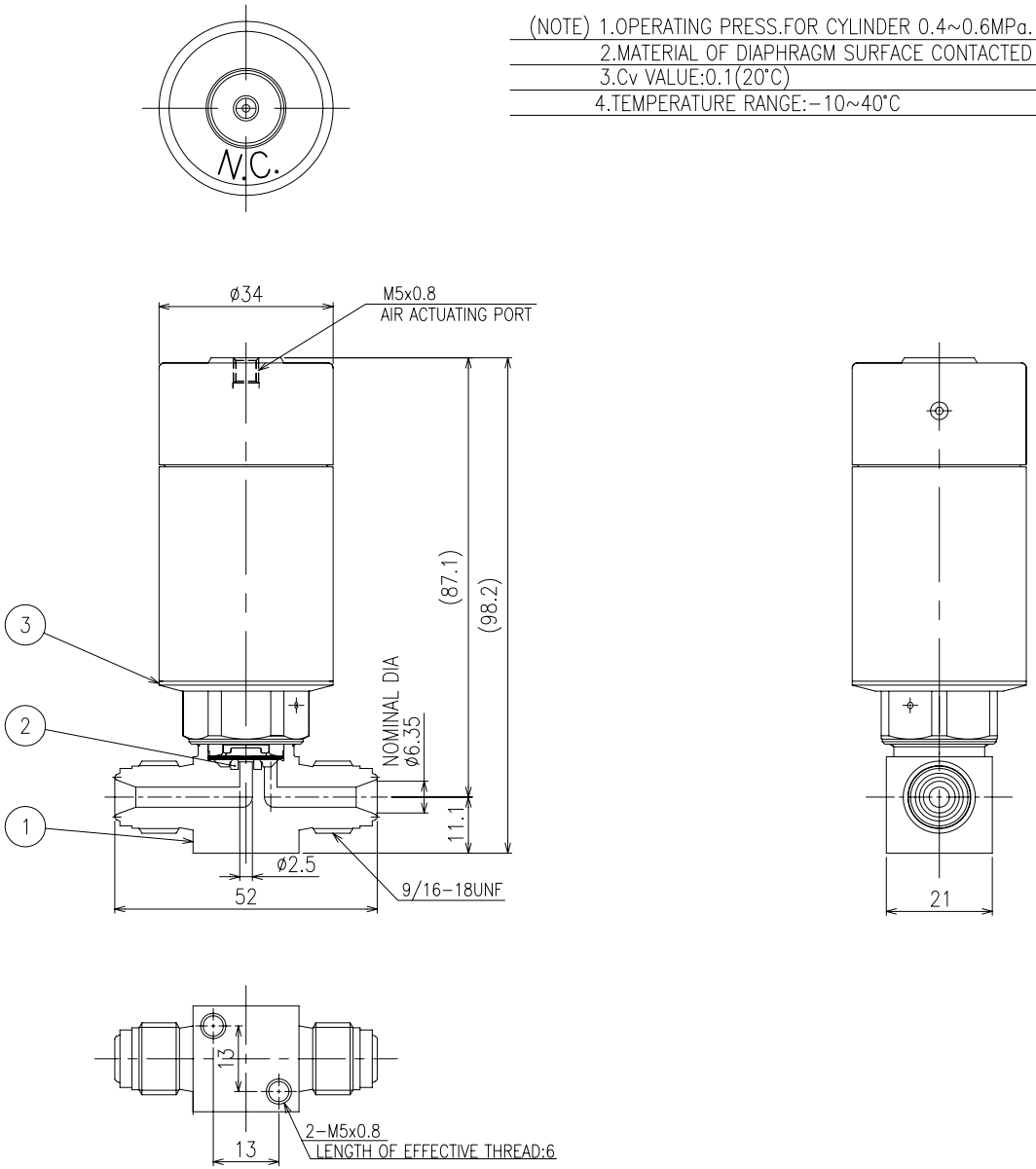

PART.NO. ｸﾛ	NAME..OF..PARTS ﾝｻ.....ﾙ」	MATERIAL ｱ..	Q'TY ﾋﾁ?	REMARK ﾝ癸.ﾍﾅ	G.T.NO.
15					
14					
13					
12					
11					
10					
9					
8					
7					
6					
5					
4					
3	NEW MEGA-MINI.HA TYPE		1SET	N.C.	
2	SEAT	PCTFE	1		
1	BODY	SUS316L	1	DOUBLE	MELT

MATERIAL LIST
ｱ....ﾖ....

DATE ..ﾜ	2003-04-02	者 ..?..ｱ	TEST PRESSURE	MPa ~~kgf/cm²~~	HYDRO 筰..?	GN2 or GHe ~~ﾍ?AIR~~
SCALE ｩ..ﾓ	FREE			SHELL ﾒｱ..?		30.8
APPD. 羆..				SEAT ﾗｩ..ｫ		22.6
CHECKED 脯..ﾞﾛ				BACK SEAT 貌..ｨ		
DESIGN 珞..ﾍｭ				SEAL ?..ﾚﾋ		22.6

RECIPIENT ﾒ.矛ｻ	
ITEM NO. ...ﾛ	FPR-NSD-721-6.35-316LP
TRADEMARK OR ﾞﾂ 蝕ﾊﾏ TRADE..NAME ﾞﾂ.ﾙ」	NEW MEGA-MINI HA TYPE
NAME ﾙ」..?	STAINLESS STEEL 20.5MPa-ø6.35 UJR TYPE AIR OPERATED MINI DIRECT DIAPHRAGM VALVE (N.C.)
DRG.NO. ?..ﾛ	KU194290E　REV.MARK ﾋﾇ.. △

Fujikin Incorporated
ｻ耡?ﾞ　フジキン®

CAREER ?..?		ｼｫﾓﾛ綵 U+53F7 ?ﾝ																			
		ｼｫﾓ?..(Aｼ?)	6	8	10	15	20	25	32	40	50	65	80	90	100	125	150	(175)	200	(225)	250
		ｼｫﾓ?..(Bｼ?)	1/8	1/4	3/8	1/2	3/4	1	1 1/4	1 1/2	2	2 1/2	3	3 1/2	4	5	6	(7)	8	(9)	10
		ﾋﾝﾎｷ鞣? (mm)	10.5	13.8	17.3	21.7	27.2	34.0	42.7	48.6	60.5	76.3	89.1	101.6	114.3	139.8	165.2	190.7	216.3	241.8	267.4

UNIT(mm)　THE THERD ANGLE ｻﾞｲﾊﾇﾛ

TYPE 香.耡　　CAB.NO.